RC Series Reverse Circulation (RC) Hammers

Reverse circulation drilling (also referred as center sample recovery or dual wall drilling) utilizes a tungsten carbide button bit to bore a hole into the rock. A pneumatic piston forces compressed air and water down the outer shell of a dual-wall pipe and drives the hammer and bit to cut the rock. Air, water, and drilling cutting are then passed through the inner rod and sucked back up by the air differential. Then, the rock and water are separated by a cyclone at the top, and the rock is deposited in a sample collection container.

RC drilling is considerably faster than core drilling because it eliminates the problems that water can cause with coring and eliminates the time spent recovering core barrel samples to the surface as they are instant even through broken or fractured ground. RC drilling is cheaper than diamond core drilling and has additional advantage that all the drilled rock is collected making it the most viable option when it comes to mineral exploration and site investigation. However, RC drilling only produces fragments and chips of broken rock, so there is less geological information available than would be obtained from core.

RC drilling allows the determination of water quality and yield much easier thus allowing the job to be completed a lot faster than conventional drilling.

The RC DTH Hammer Features & Advantage:

1. Uncontaminated Samples:

The R.C. System collects sample through the recovery holes in the face of the drill bit immediately as the cuttings or sample is formed. The drilled sample does not have to travel the length of the hammer where contamination and loss of sample takes place.

2. Higher Productivity:

In broken and fractured ground conditions, the R.C. will often outperform the conventional hammer in terms of penetration rates.

3. Dry Sample:

Even in certain water bearing stratas it is still possible to collect a dry sample because the cuttings (sample) are collected as they are formed through the face of the drill bit.

4. High Sample Recovery Rate:

Because the sample is collected through the face of the drill bit there is no loss of sample when drilling through broken or fractured ground. And since the bit matched to the chuck size, there is very little bypass of sample and recovery rates of up to 98% are generally achievable.

5. More accurate samples in low grade ores.

6. Continuous sampling from hole bottom

7. Straighter holes in broken formations

8. Reduced drilling costs.

9. Ability to take large bulk samples.

10. Ability to penetrate unconsolidated formations with cavities without loss of circulation.

RC Series RC DTH Hammer Technical Parameters

Hammer Type	Shank Type	Hammer Length	External Diameter	Drilling Range		Working Pressure		Connection Thread
		mm	mm	mm	inch	Bar (0.1 MPa)	PSI (lb/in²)	
MRC531	RE531	1069	81	84~100	4 3/32 ~ 4 23/32"	15~35	215~510	3” Remet
MRC3.5Y	RC3.5Y	1184	94	98~115	4 3/8 ~ 5"	15~35	215~510	3" Remet
MRC004	RE004	1252	107	111~127	4 3/8 ~ 5"	15~35	215~510	3.5"-4" Remet, 4" Metzke
MRC542	RE542	1191	109.5	113~130	4 29/64 ~ 5 1/8"	15~35	215~510	3.5"-4" Remet, 4" Metzke
MRC543	RE543	1191	116	120~135	4 23/32 ~ 5 5/16"	15~35	215~510	3.5"-4" Remet, 4" Metzke
MRC545	RE545	1261	117.5	122~135	4 51/64 ~ 5 5/16"	15~35	215~510	4"-4.5" Remet, 4"-4.5" Metzke
MRC040	PR40	1362	120.5	124~142	4 7/8 ~ 5 17/32"	15~35	215~510	3.5"-4.5" Remet, 3.5"-4.5" Metzke
MRC052	PR52/PR52R	1227	121	126~142	4 61/64 ~ 5 17/32"	15~35	215~510	4"-4.5" Remet, 4"-4.5" Metzke
MRC547	RE547	1270	124.5	130~146	5 1/8 ~ 5 3/4"	15~35	215~510	4.5" Remet, 4.5" Metzke
MRC054	PR54/PR54R	1294	130	135~150	5 5/16 ~ 5 29/32"	15~35	215~510	4.5" Remet, 4.5" Metzke
MRC6Y/6Y(R)	RC6Y/RC6Y(R)	1320	146	152~190	6 ~ 7 31/64"	15~35	215~510	Upon thread of the drill tube
MRC8Y/8Y(R)	RC8Y/RC8Y(R)	1395	175	190~250	7 31/64 ~ 9 27/32"	15~35	215~510	Upon thread of the drill tube
MRC10Y/10Y(R)	RC10Y/RC10Y(R)	1528	240	250~370	9 27/32 ~ 14 9/16"	15~35	215~510	Upon thread of the drill tube

RC531 R.C. Hammer

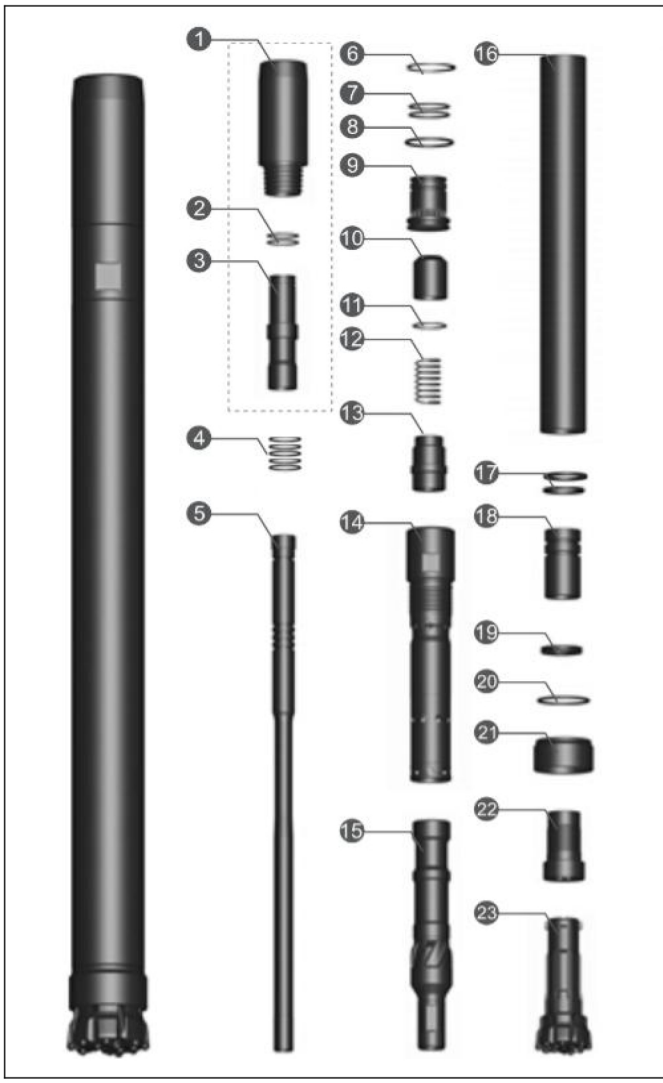

Items	Denomination	Weight (kg)
01	Top Sub	3.76
02	“O” Ring of Adaptor Screen	0.01
03	Adaptor Screen	1.85
04	“O” Ring of Sample Tube	0.01
05	Sample Tube	1.97
06	Circlip of Inner Cylinder	0.04
07	“O” Ring of Distributor Nozzle	0.01
08	“O” Ring of Distributor Nozzle	0.01
09	Distributor Nozzle	0.37
10	Plunger	0.08
11	“O” Ring of Plunger	0.01
12	Spring	0.10
13	Mount Sample Tube	0.49
14	Inner Cylinder	3.40
15	Piston	4.69
16	Piston Case	9.20
17	Seal Cover	0.02
18	Bush Drive Sub	1.03
19	Bit Retaining Ring	0.08
20	“O” Ring of Bit Retaining Ring	0.01
21	Shroud	0.45
22	Drive Sub	1.60
23	Drill Bit	4.20

Technical Data

Length Without Bit	Weight Without Bit	External Diameter	Bit Shank	Hole Range	Connection Thread	
1069mm	29.0kg	Φ81mm	RE531	Φ84 - 100mm	3” Remet	
Working Pressure	Impact Rate at 2.4Mpa	Recommended Rotation Speed		Air Consumption		
				1.7Mpa	2.4Mpa	3.0Mpa
1.5-3.5Mpa	30HZ	25-40r/min		7m³/min	10m³/min	14m³/min

MRC3.5 YR.C. Hammer

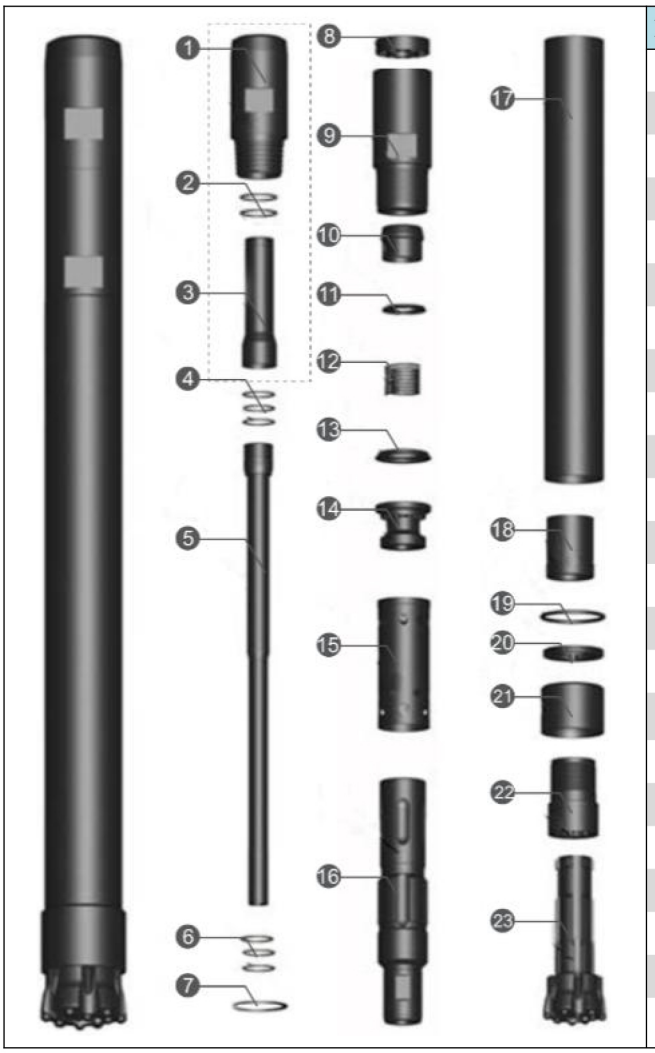

Items	Denomination	Weight (kg)
01	Top Sub	6.13
02	“O” Ring of Adaptor Screen	0.01
03	Adaptor Screen	1.49
04	“O” Ring of Sample Tube	0.01
05	Sample Tube	3.31
06	“O” Ring of Sample Tube	0.01
07	Circlip of Top Sub	0.01
08	Distributor Nozzle	0.30
09	Top Sub	5.38
10	Plunger	0.28
11	“Y” Ring of Plunger	0.01
12	Spring	0.05
13	Compression Buffer	0.09
14	Air Distributor	0.87
15	Inner Cylinder	1.26
16	Piston	8.33
17	Piston Case	10.80
18	Bush Drive Sub	1.47
19	“O” Ring of Bit Retaining Ring	0.01
20	Bit Retaining Ring	0.17
21	Shroud	1.10
22	Drive Sub	2.90
23	Drill Bit	

Technical Data

Length Without Bit	Weight Without Bit	External Diameter	Bit Shank	Hole Range	Connection Thread	
1184mm	44.0kg	Φ94mm	RC3.5Y	Φ98 - 115mm	3” Remet	
Working Pressure	Impact Rate at 2.4Mpa	Recommended Rotation Speed		Air Consumption		
				1.7Mpa	2.4Mpa	3.0Mpa
1.5-3.5Mpa	30HZ	25-40r/min		8m³/min	11m³/min	15m³/min

MRC004 R.C. Hammer

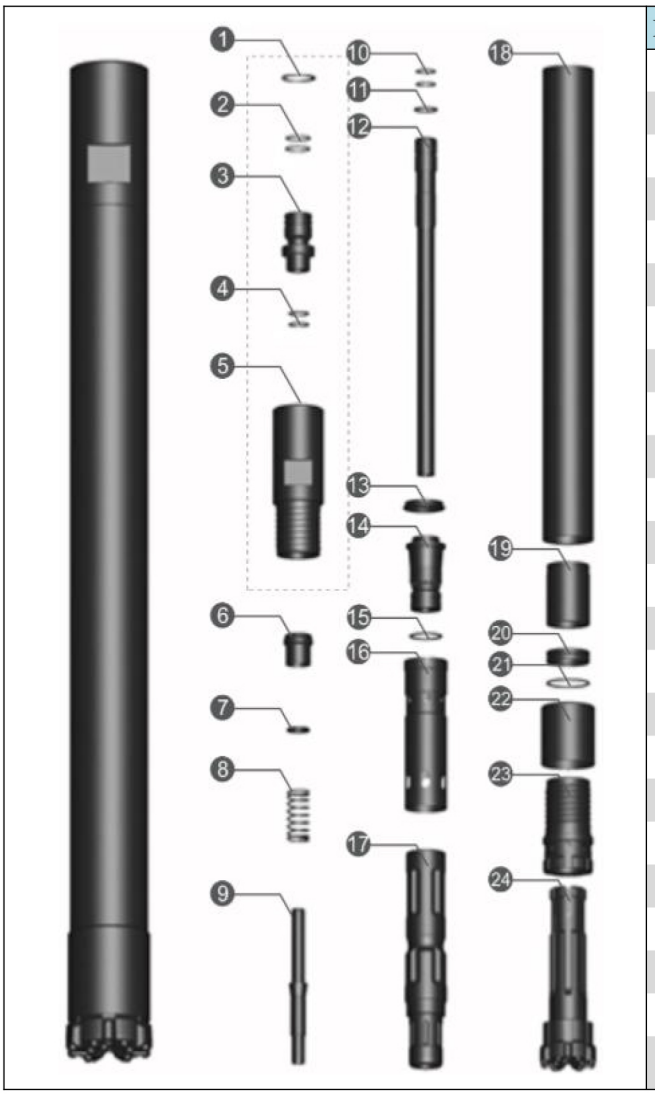

Items	Denomination	Weight (kg)
01	Circlip of Top Sub	0.02
02	“O” Rings of Adaptor Screen	0.02
03	Adaptor Screen	1.06
04	O””Ring of Adaptor Screen	0.02
05	Top Sub	7.79
06	Plunger	0.51
07	“Y” Ring of Plunger	0.02
08	Spring	0.06
09	Sample Tube Upper	0.74
10	“O” Ring of Sample Tube	0.02
11	“O” Ring of Sample Tube	0.02
12	Sample Tube	2.38
13	Compression Buffer	0.17
14	Air Distributor	1.75
15	“O” Ring of Air Distributor	0.02
16	Inner Cylinder	2.45
17	Piston	10.45
18	Piston Case	17.95
19	Bush Drive Sub	1.77
20	Bit Retaining Ring	0.29
21	“O” Ring of Bit Retaining Ring	0.02
22	Shroud	1.05
23	Drive Sub	3.13
24	Drill Bit	11.70

Technical Data

Length Without Bit	Weight Without Bit	External Diameter	Bit Shank	Hole Range	Connection Thread	
1252mm	52.0kg	Φ107mm	RE004	Φ111-Φ127mm	3.5”~4” Remet, 4” Metzke	
Working Pressure	Impact Rate at 2.4Mpa	Recommended Rotation Speed		Air consumption		
				1.7Mpa	2.4Mpa	3.0Mpa
1.5-3.5Mpa	30HZ	25-40r/min		8m³/min	12m³/min	16m³/min

MRC542 R.C. Hammer

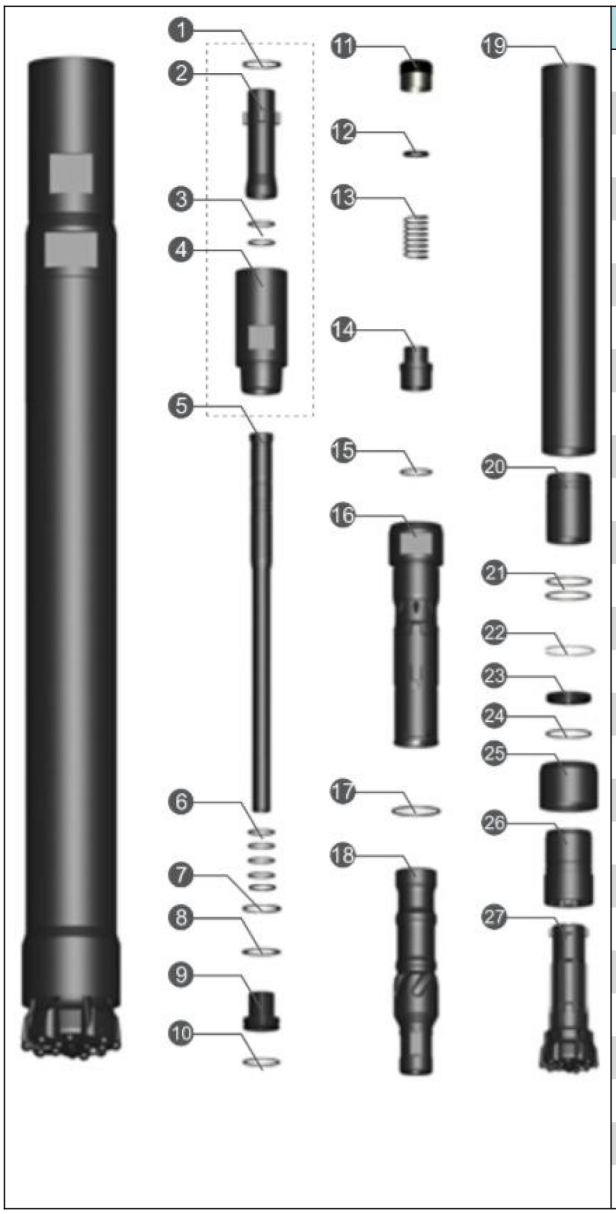

Items	Denomination	Weight (kg)
01	Circlip of Top Sub	0.04
02	Adaptor Screen	2.55
03	“O” Ring of Adaptor Screen	0.02
04	Top Sub	8.52
05	Sample Tube	3.50
06	“O” Ring of Sample Tube	0.02
07	Circlip of Inner Cylinder	0.04
08	Airscreen	0.02
09	Distributor Nozzle	0.56
10	“O” Ring of Distributor Nozzle	0.02
11	Plunger	0.50
12	“Y” Ring of Plunger	0.02
13	Spring	0.08
14	Mount Sample Tube	0.86
15	“Y” Ring of Mount Sample Tube	0.02
16	Inner Cylinder	7.26
17	“O” Ring of Inner Cylinder	0.02
18	Piston	11.64
19	Piston Case	19.17
20	Bush Drive Sub	2.35
21	“O” Ring of Bush Drive Sub	0.02
22	Piston Retaining Ring	0.05
23	Bit Retaining Ring	0.26
24	“O” Ring of Bit Retaining Ring	0.02
25	Shroud	2.21
26	Drive Sub	2.94
27	Drill Bit	10.96

Technical Data

Length Without Bit	Weight Without Bit	External Diameter	Bit Shank	Hole Range	Connection Thread	
1191mm	57.0kg	Φ109.5mm	RE542	Φ113-Φ130mm	3.5”~4” Remet, 4” Metzke	
Working Pressure	Impact Rate at 2.4Mpa	Recommended Rotation Speed		Air Consumption		
				1.7Mpa	2.4Mpa	3.0Mpa
1.5-3.5Mpa	35HZ	25-40r/min		12m³/min	18m³/min	26m³/min

MRC543 R.C. Hammer

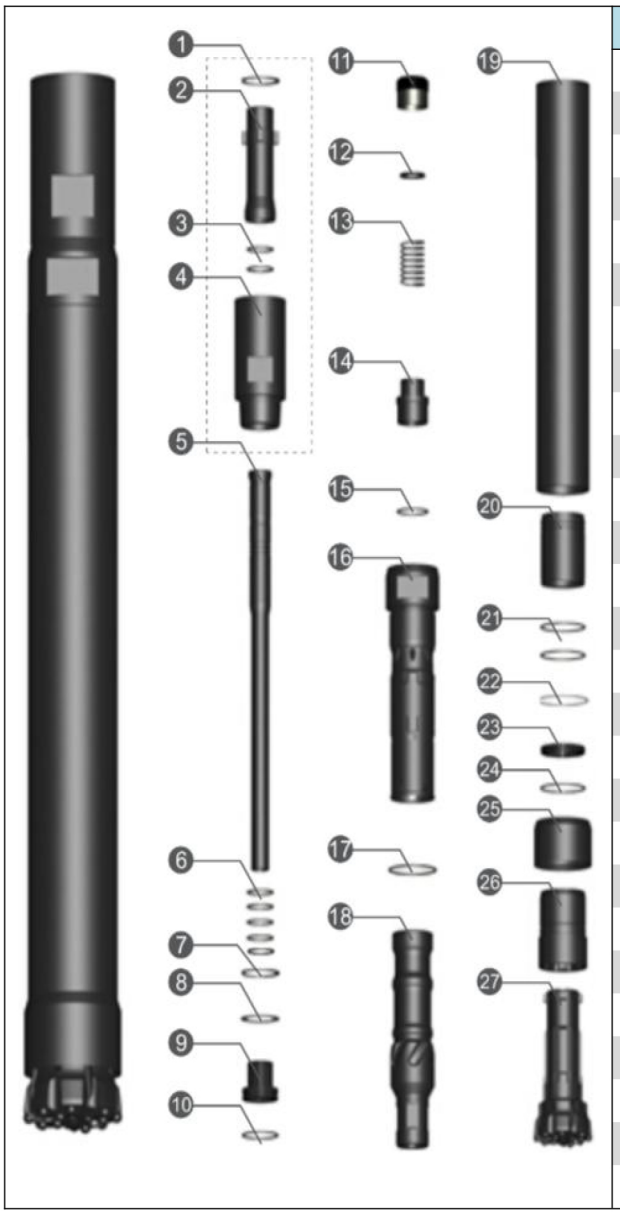

Items	Denomination	Weight (kg)
01	Circlip of Top Sub	0.04
02	Adaptor Scre en	2.55
03	“O” Ring of Adaptor Screen	0.02
04	Top Sub	8.52
05	Sample Tube	3.50
06	“O” Ring of Sample Tube	0.02
07	Circlip of Inner Cylinder	0.04
08	Airscreen	0.02
09	Distributor Nozzle	0.56
10	“O” Ring of Distributor Nozzle	0.02
11	Plunger	0.50
12	“Y” Ring of Plunger	0.02
13	Spring	0.08
14	Mount Sample Tube	0.86
15	“Y” Ring of Mount Sample Tube	0.02
16	Inner Cylinder	7.26
17	“O” Ring of Inner Cylinder	0.02
18	Piston	11.64
19	Piston Case	19.17
20	Bush Drive Sub	2.35
21	“O” Ring of Bush Drive Sub	0.02
22	Piston Retaining Ring	0.05
23	Bit Retaining Ring	0.26
24	“O” Ring of Bit Retaining Ring	0.02
25	Shroud	2.21
26	Drive Sub	2.94
27	Drill Bit	10.96

Technical Data

Length Without Bit	Weight Without Bit	External Diameter	Bit Shank	Hole Range	Connection Thread	
1191mm	63.0kg	Φ116mm	RE543	Φ120-Φ135mm	3.5”~4” Remet, 4” Metzke	
Working Pressure	Impact Rate at 2.4Mpa	Recommended Rotation Speed		Air Consumption		
				1.7Mpa	2.4Mpa	3.0Mpa
1.5-3.5Mpa	35HZ	25-40r/min		12m³/min	18m³/min	26m³/min

MRC545 R.C. Hammer

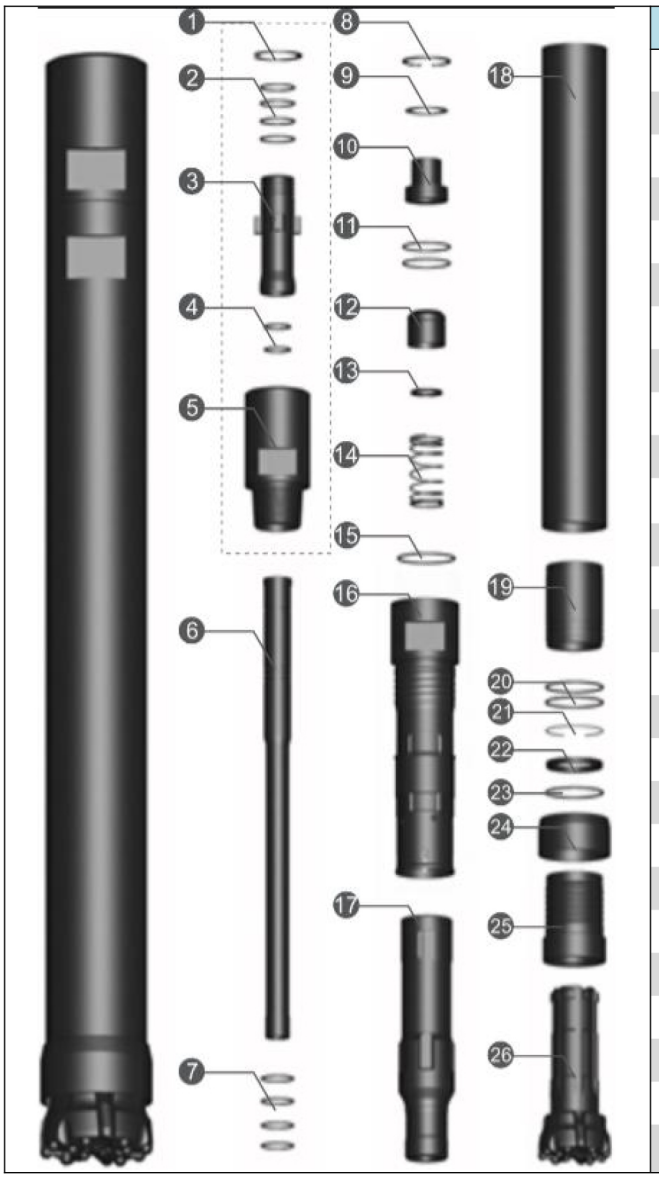

Items	Denomination	Weight (kg)
01	Circlip of Top Sub	0.04
02	“O” Ring of Adaptor Screen	0.02
03	Adaptor Screen	2.95
04	“O” Ring of Adaptor Screen	0.02
05	Top Sub	6.98
06	Sample Tube	4.61
07	“O” Ring of Sample Tube	0.02
08	Circlip of Inner Cylinder	0.04
09	Airscreen	0.02
10	Distributor Nozzle	0.48
11	“O” Ring of Distributor Nozzle	0.02
12	Plunger	0.53
13	“Y” Ring of Plunger	0.02
14	Spring	0.12
15	“O”of Inner Cylinder	0.02
16	Inner Cylinder	10.20
17	Piston	15.10
18	Piston Case	17.20
19	Bush Drive Sub	2.95
20	“O” of Bush Drive Sub	0.02
21	Piston Retaining Ring	0.04
22	Bit Retaining Ring	0.23
23	“O” Ring of Bit Retaining Ring	0.02
24	Shroud	1.60
25	Drive Sub	3.14
26	Drill Bit	12.60

Technical Data

Length Without Bit	Weight Without Bit	External Diameter	Bit Shank	Hole Range	Connection Thread
1261mm	65.0kg	Φ117.5mm	RE545	Φ122-Φ135mm	4”~4.5” Remet, 4”~4.5” Metzke

Working Pressure	Impact Rate at 2.4Mpa	Recommended Rotation Speed	Air Consumption		
			1.7Mpa	2.4Mpa	3.0Mpa
1.5-3.5Mpa	35HZ	25-40r/min	16m³/min	22m³/min	28m³/min

MRC040 R.C. Hammer

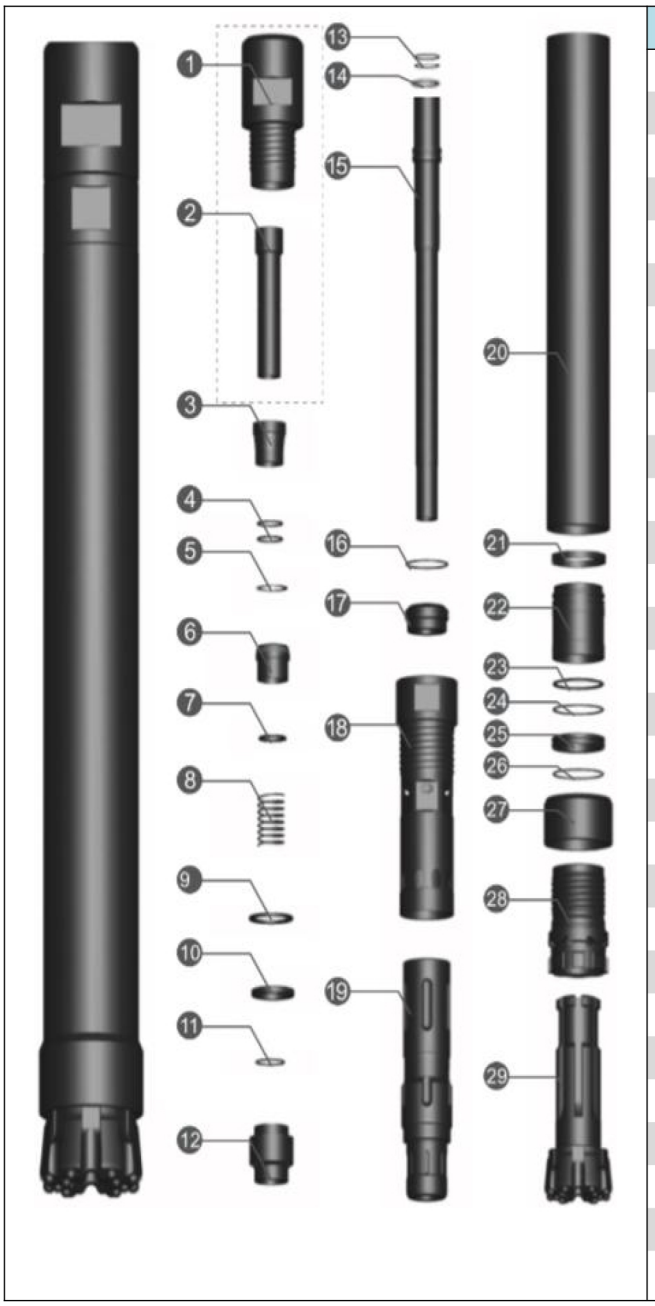

Items	Denomination	Weight (kg)
01	Top Sub	9.81
02	Adaptor Screen	1.33
03	Airscreen Top Load	0.27
04	”O”Ring of Airscreen Top Load	0.02
05	Cliclip of Adaptor Screen	0.03
06	Plunger	0.63
07	“Y” Ring of Air Distributor	0.02
08	Spring	0.12
09	Make up Ring Steel	0.09
10	Compression Buffer	0.06
11	“O” Ring of Air Distributor	0.02
12	Air Distributor	1.34
13	“O” Ring of Sample Tube Lower	0.02
14	“O” Ring of Sample Tube Lower	0.03
15	Sample Tube Lower	4.32
16	“O” Ring of Mount Sample Tube	0.02
17	Mount Sample Tube	0.97
18	Inner Cylinder	7.69
19	Piston	13.63
20	Piston Case	24.14
21	Piston Retaining Ring	0.15
22	Bush Drive Sub	1.96
23	“O” Ring of Bush Drive Sub	0.02
24	“O” Ring of Bush Drive Sub	0.02
25	Bit Retaining Ring	0.31
26	“O” Ring of Bit Retaining Ring	0.02
27	Shroud	2.20
28	Drive Sub	3.67
29	Drill Bit	15.09

Technical Data

Length Without Bit	Weight Without Bit	External Diameter	Bit Shank	Hole Range	Connection Thread
1362mm	80.5kg	Φ120.5mm	PR40	Φ124-Φ142mm	3.5”~4.5” Remet, 3.5”~4.5” Metzke

Working Pressure	Impact Rate at 2.4Mpa	Recommended Rotation Speed	Air Consumption		
			1.7Mpa	2.4Mpa	3.0Mpa
1.5-3.5Mpa	35HZ	25-40r/min	16m³/min	22m³/min	28m³/min

MRC052 R.C. Hammer

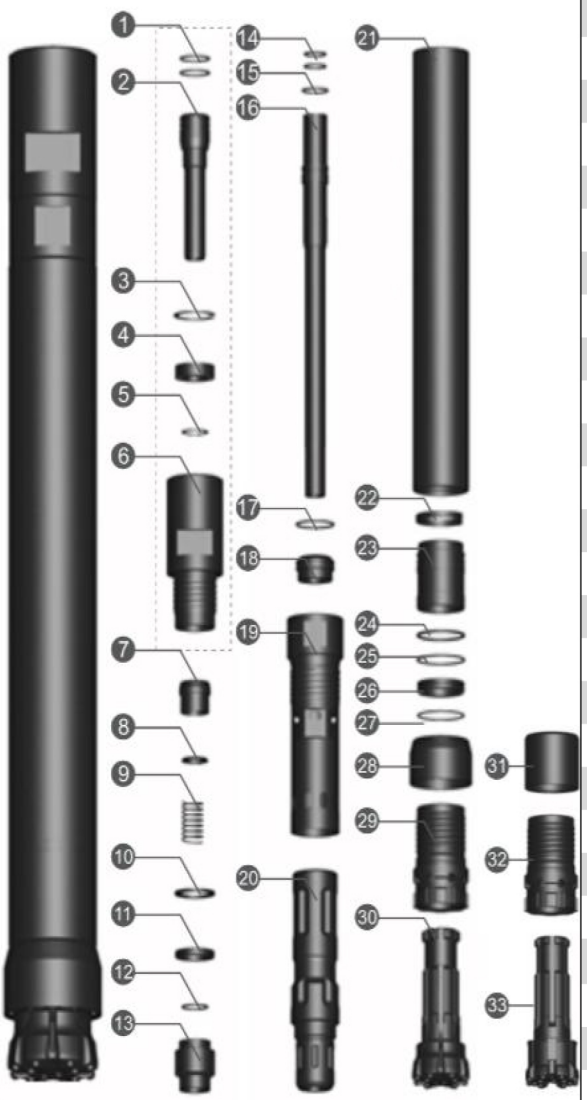

Items	Denomination	Weight (kg)
01	“O” Ring of Adaptor Screen	0.02
02	Adaptor Screen	2.19
03	Circlip of Top Sub	0.04
04	Airscreen Top Load	0.42
05	Circlip of Adaptor Screen	0.03
06	Top Sub	8.92
07	Plunger	0.63
08	“Y” Ring of Plunger	0.03
09	Spring	0.12
10	Make Up Ring Steel	0.10
11	Compression Buffer	0.05
12	“O” Ring of Air Distributor	0.02
13	Air Distributor	1.31
14	“O” Ring of Sample Tube	0.02
15	“O” Ring of Sample Tube	0.02
16	Sample Tube	4.52
17	“O” Ring of Mount Sample Tube	0.02
18	Mount Sample Tube	0.80
19	Inner Cylinder	7.39
20	Piston	14.60
21	Piston Case	18.80
22	Piston Retaining Ring	0.13
23	Bush Drive Sub	1.89
24	“O’ Ring of Bush Drive Sub	0.02
25	“O” Ring of Bush Drive Sub	0.02
26	Bit Retaining Ring	0.31
27	“O” Ring of Bit Retaining Ring	0.02
28	Shroud	1.86
29	Drive Sub	4.17
30	Drill Bit	11.00
31	Retention Shroud	1.86
32	Retention Drive Sub	4.17
33	Retention Drill Bit	11.00

Technical Data

Length Without Bit	Weight Without Bit	Bit Shank	Hole Range	Connection Thread		
1227mm	68.5kg	PR52/PR52R	Φ126-Φ142mm	4”~4.5” Remet, 4”~4.5” Metzke		
Working Pressure	Impact Rate at 2.4Mpa	Recommended Rotation Speed		Air Consumption		
				1.7Mpa	2.4Mpa	3.0Mpa
1.5-3.5Mpa	35HZ	25-40r/min		16m³/min	22m³/min	28m³/min

MRC547 R.C. Hammer

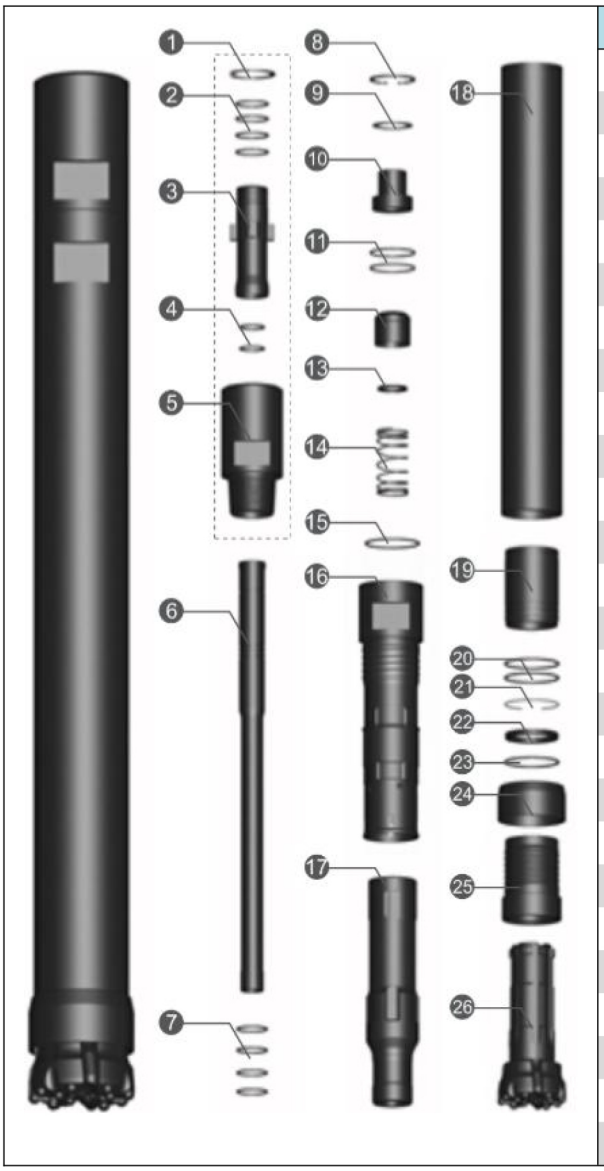

Items	Denomination	Weight (kg)
01	Circlip of Top Sub	0.04
02	“O” Ring of adaptor Screen	0.02
03	Adaptor Screen	2.95
04	“O” Ring of Adaptor Screen	0.02
05	Top Sub	7.38
06	Sample Tube	4.61
07	“O” Ring of Sample Tube	0.02
08	Circlip of Inner Cylinder	0.04
09	Airscreen	0.02
10	Distributor Nozzle	0.48
11	“O” Ring of Distributor Nozzle	0.02
12	Plunger	0.53
13	“Y” Ring of Plunger	0.02
14	Spring	0.12
15	“O” Ring of Inner Cylinder	0.02
16	Inner Cylinder	10.97
17	Piston	17.08
18	Piston Case	18.55
19	Bush Drive Sub	3.04
20	“O” Ring of Bush Drive Sub	0.02
21	Piston Retaining Ring	0.04
22	Bit Retaining Ring	0.23
23	“O” Ring of Bit Retaining Ring	0.02
24	Shroud	1.70
25	Drive Sub	3.61
26	Drill Bit	14.30

Technical Data

Length Without Bit	Weight Without Bit	External Diameter	Bit Shank	Hole Range	Connection Thread	
1270mm	74.0kg	Φ124.5mm	RE547	Φ130-Φ146mm	4.5” Remet, 4.5” Metzke	
Working Pressure	Impact Rate at 2.4Mpa	Recommended Rotation Speed		Air Consumption		
				1.7Mpa	2.4Mpa	3.0Mpa
1.5-3.5Mpa	35HZ	25-40r/min		16m³/min	22m³/min	28m³/min

MRC054 R.C. Hammer

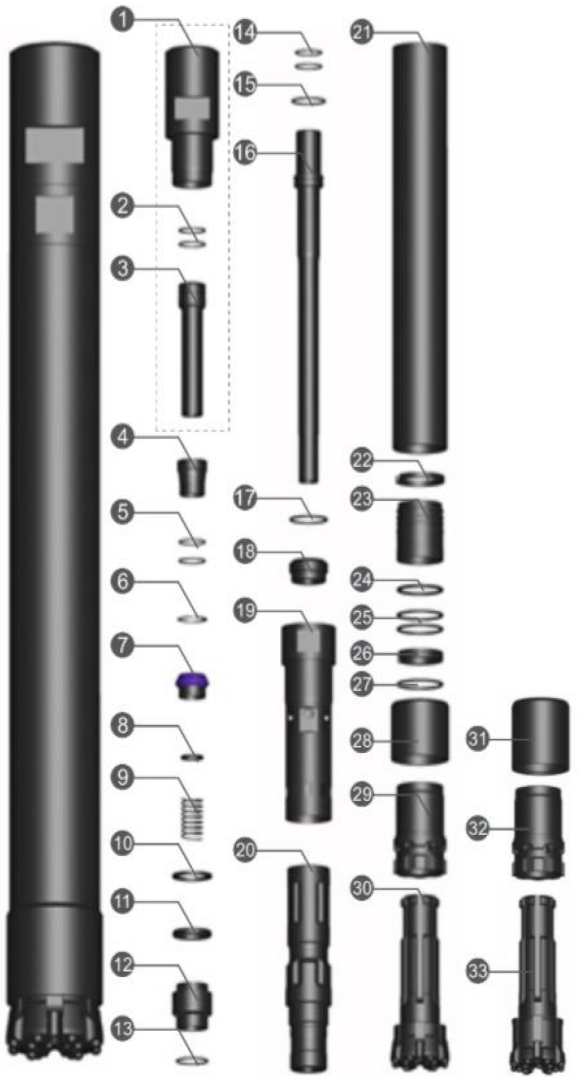

Items	Denomination	Weight (kg)
01	Top Sub	11.6
02	“O” Ring of Adaptor Screen	0.02
03	Adaptor Screen	2.35
04	Airscreen Top Load	0.37
05	“O” Ring of Airscreen Top Load	7.79
06	Circlip of Adaptor Screen	0.04
07	Plunger	0.58
08	“Y” Ring of Plunger	0.02
09	Spring	0.12
10	Make up Ring Steel	0.14
11	Compression Buffer	0.06
12	Air Distributor	1.54
13	“O” Ring of Air Distributor	0.02
14	“O” Ring of Sample Tube	0.02
15	“O” Ring of Sample Tube	0.02
16	Sample Tube	6.47
17	“O” Ring of Mount Sample Tube	0.02
18	Mount Sample Tube	1.02
19	Inner Cylinder	8.54
20	Piston	17.2
21	Piston Case	23.40
22	Piston Retaining Ring	0.20
23	Bush Drive Sub	2.53
24	“O” Ring of Bush Drive Sub	0.02
25	“O” Ring of Bush Drive Sub	0.02
26	Bit Retaining Ring	0.43
27	“O” Ring of Bit Retaining Ring	0.02
28	Shroud	1.86
29	Drive sub	4.17
30	Drill bit	11.00
31	Retention Shroud	1.86
32	Retention Drive Sub	4.17
33	Retention Drill Bit	11.00

Technical Data

Length Without Bit	Weight Without Bit	External Diameter	Bit Shank	Hole Range	Connection Thread
1294mm	84.5kg	Φ130mm	PR54/PR54R	Φ135-Φ150mm	4.5” Remet, 4.5” Metzke

Working Pressure	Impact Rate at 2.4Mpa	Recommended Rotation Speed	Air Consumption		
			1.7Mpa	2.4Mpa	3.0Mpa
1.5-3.5Mpa	35HZ	25-40r/min	16m³/min	22m³/min	28m³/min

MRC6Y/6Y(R) R.C. Hammer

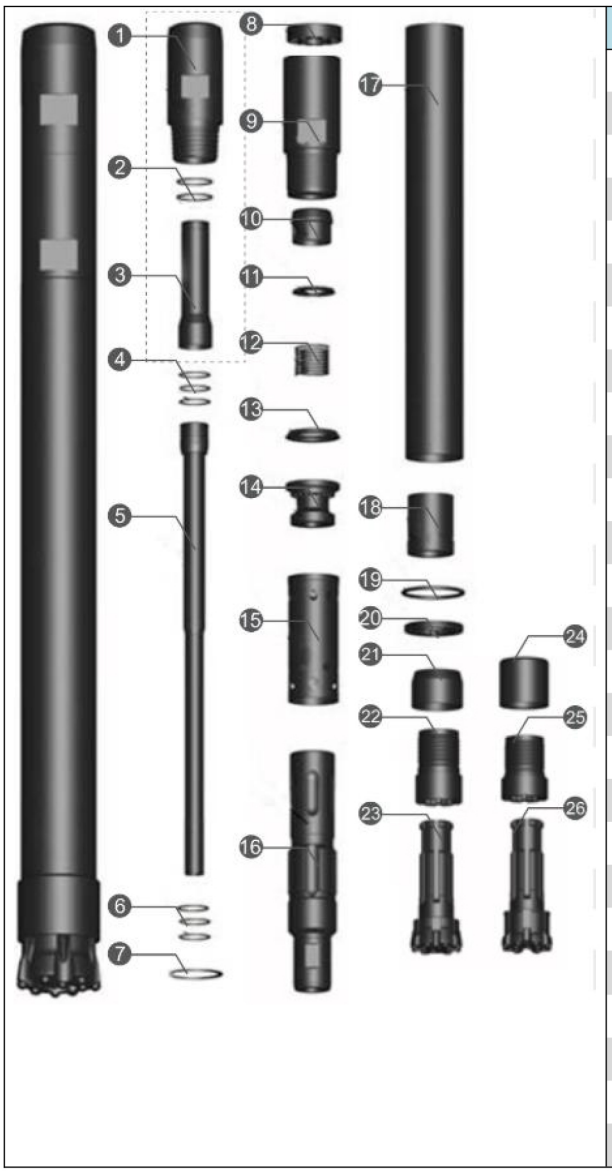

Items	Denomination	Weight (kg)
01	Top Sub	12.30
02	“O” Ring of Adaptor Screen	0.02
03	Adaptor Screen	2.98
04	“O” Ring of Sample Tube	0.02
05	Sample Tube	6.62
06	“O” Ring of Sample Tube	0.02
07	Circlip of Top Sub	0.02
08	Distributor Nozzle	0.60
09	Top Sub	10.80
10	Plunger	0.56
11	“Y” Ring of Plunger	0.02
12	Spring	0.10
13	Compression Buffer	0.18
14	Air Distributor	1.74
15	Inner Cylinder	2.52
16	Piston	16.70
17	Piston Case	21.60
18	Bush Drive Sub	2.94
19	“O” Ring of Bit Retaining Ring	0.02
20	Bit Retaining Ring	0.34
21	Shroud	3.46
22	Drive Sub	7.95
23	Drill Bit	20.60
24	Retention shroud	5.20
25	Retention drive sub	7.40
26	Retention Drill Bit	23.20

Technical Data

Length Without Bit	Weight Without Bit	External Diameter	Bit Shank	Hole Range	Connection Thread
1320mm	91.4kg	Φ146mm	RC6Y/RC6Y(R)	Φ152-Φ190mm	Upon the thread of the drill tube

Working Pressure	Impact Rate at 2.4Mpa	Recommended Rotation Speed	Air Consumption		
			1.7Mpa	2.4Mpa	3.0Mpa
1.5-3.5Mpa	28HZ	25-40r/min	20m³/min	26m³/min	35m³/min

MRC8Y/8Y(R) R.C. Hammer

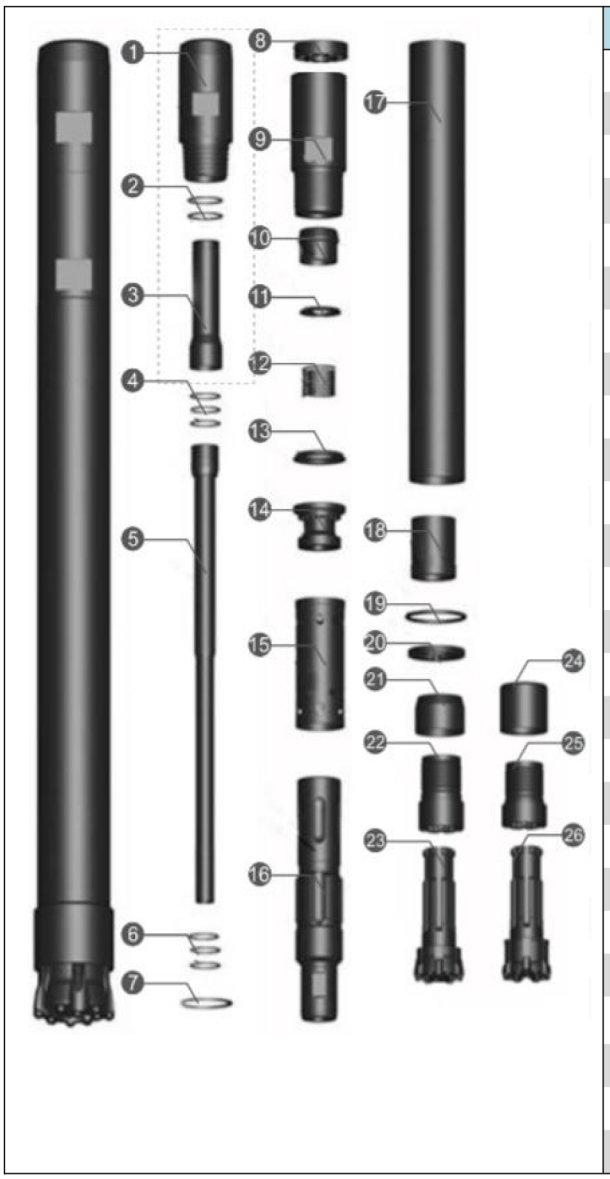

Items	Denomination	Weight (kg)
01	Top Sub	22.00
02	“O” Ring of Adaptor Screen	0.36
03	Adaptor Screen	5.36
04	“O” Ring of Sample Tube	0.36
05	Sample Tube	11.90
06	“O” Ring of Sample Tube	0.36
07	Circlip of Top Sub	0.36
08	Distributor Nozzle	1.08
09	Top Sub	19.40
10	Plunger	1.01
11	“Y” Ring of Plunger	0.36
12	Spring	0.18
13	Compression Buffer	0.32
14	Air Distributor	3.13
15	Inner Cylinder	4.54
16	Piston	30.10
17	Piston Case	38.90
18	Bush Drive Sub	5.30
19	“O” Ring of Bit Retaining Ring	0.36
20	Bit Retaining Ring	0.61
21	Shroud	6.95
22	Drive Sub	15.40
23	Drill Bit	38.60
24	Retention Shroud	9.53
25	Retention Drive Sub	15.20
26	Retention Drill Bit	42.80

Technical Data

Length Without Bit	Weight Without Bit	External Diameter	Bit Shank	Hole Range	Connection Thread	
1395mm	180.3kg	Φ175mm	RC8Y/RC82R(R)	Φ190-Φ250mm	Upon the thread of the drill tube	
Working Pressure	Impact Rate at 2.4Mpa	Recommended Rotation Speed		Air Consumption		
				1.7Mpa	2.4Mpa	3.0Mpa
1.5-3.5Mpa	24HZ	25-40r/min		28m³/min	38m³/min	52m³/min

MRC10R/10Y(R) R.C. Hammer

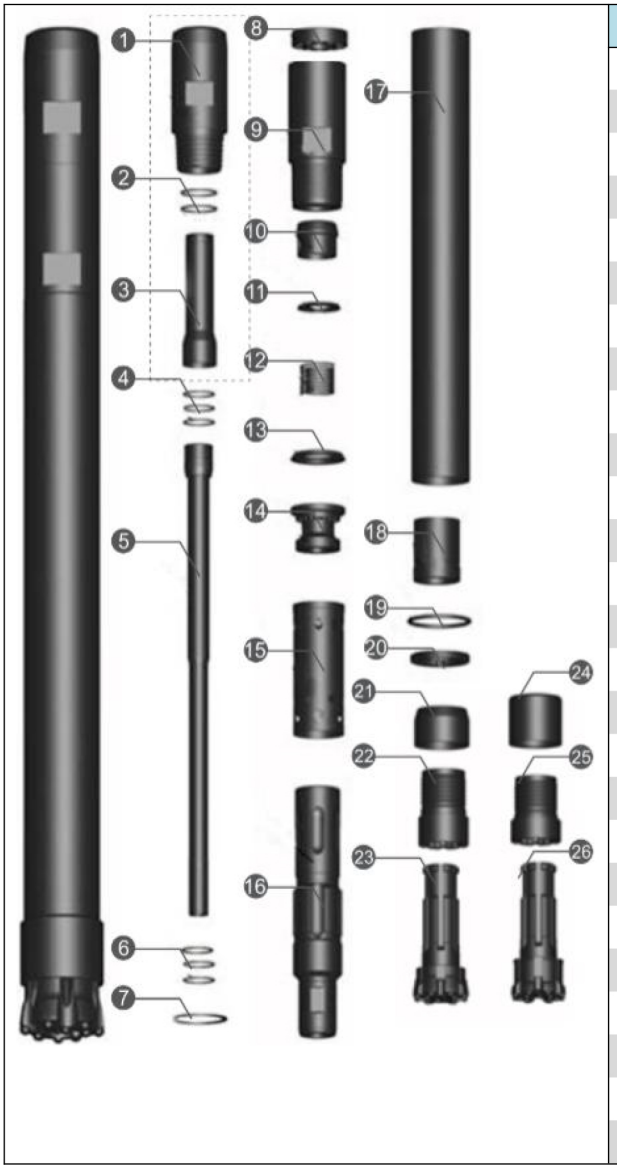

Items	Denomination	Weight (kg)
01	Top Sub	39.80
02	“O” Ring of Adaptor Screen	0.065
03	Adaptor Screen	9.69
04	“O” Ring of Sample Tube	0.065
05	Sample Tube	21.50
06	“O” Ring of Sample Tube	0.065
07	Circlip of Top Sub	0.065
08	Distributor Nozzle	1.95
09	Top Sub	34.90
10	Plunger	1.82
11	“Y” Ring of Plunger	0.065
12	Spring	0.33
13	Compression Buffer	0.56
14	Air Distributor	5.66
15	Inner Cylinder	8.19
16	Piston	54.10
17	Piston case	70.20
18	Bush Drive Sub	9.60
19	“O” Ring of Bit Retaining Ring	0.065
20	Bit Retaining Ring	1.10
21	Shroud	14.20
22	Drive Sub	30.40
23	Drill Bit	82.50
24	Retention Shroud	19.50
25	Retention Drive Sub	29.50
26	Retention Drill Bit	91.40

Technical Data

Length Without Bit	Weight Without Bit	External Diameter	Bit Shank	Hole Range	Connection Thread	
1528mm	304.3kg	Φ240mm	RC10Y/RC10Y(R)	Φ250-Φ370mm	Upon the thread of the drill tube	
Working Pressure	Impact Rate at 2.4Mpa	Recommended Rotation Speed		Air Consumption		
				1.7Mpa	2.4Mpa	3.0Mpa
1.5-3.5Mpa	20HZ	15-20r/min		36m³/min	48m³/min	65m³/min